SYSTEM 8

The Round Sound by R. F. C. Stephens

(Reprinted from Popular HiFi, March 1978)

Venerable hi-fi enthusiasts may be familiar with the "quarter wavelength pipe" which was in vogue many years ago. It was a loudspeaker design favoured by many DIY enthusiasts.

Our new design also uses material from your local builders merchants – in this case 20 cm internal diameter heavyweight flue pipe.

This enclosure material and shape has three advantages over conventional rectangular cabinets:

One: The stiffness of the enclosure due to its cylindrical shape means that enclosure "panel" resonances are inhibited and therefore coloration is reduced.

Two: The acoustic opaqueness (acopacity – a new word?) of this type of cabinet helps to reduce another source of distortion – the out-of-phase sound radiated through the walls of a speaker enclosure.

Three: Simplicity of construction and also ease of achieving an acceptable standard of finish.

One disadvantage of a cylindrical enclosure is the resonance of the air column itself contained in the cabinet. In this design this is inhibited by using BAF wadding placed at top and bottom of the cylinder (and also by the long fibre wool in the enclosure).

Our aim was to achieve a clean analytical sound up to the standards of the commercial mini monitor designs but at rather less than half the price.

The drive units employed are Dalesford 5" Bextrene bass unit D30/110 and Isophon KK10/8 dome tweeter. Dalesford's bass unit was chosen for its smoothness and exceptional power handling. Specifically its voice coil will withstand a continuous sine wave of 1 kHz at 40 watts for 20 minutes, which means that, in practice, high volume levels can be achieved without "cooking" the voice coil.

Compact speakers are inherently insensitive and therefore are driven harder than larger designs to reach the same sound level. A good reserve of power handling is an essential feature for a bass unit used in a really compact enclosure.

Standard values are used for all the crossover components. Low loss inductors must be used in the bass section. The baffle boards are all held in place with Araldite – no screws at all are used in the cabinet apart from those holding the drive units and crossovers in place.

This type of construction makes it easy to build a speaker which is visually pleasing and at the same time technically efficient.

Stage one

The pipe which forms the basis of the cabinet must be a heavyweight grade with a wall thickness of 1 cm and an internal diameter of 20 cm. Cutting this material is easy enough with the right saw. I found the most satisfactory tool was a metal cutting saw blade type 1275MB which is made to fit a standard Stanley Knife handle (the job will be made much easier if you buy two of these rather than try to complete the two pipes with only one blade).

Stage one in constructing this design is obviously to obtain your flue pipe. As this can be bought in precut lengths as part of a kit (see end of article) and only a masochist will want the hassle of carrying home a 6 foot length of pipe and sawing this (accurately!) into the pieces required, I intend to start by saying "take two 30 cm and two 3.5 cm lengths of pipe" . . . .

Mark out the 30 cm pieces as in Fig. 1. Cutting across the pipe is, of course, easy enough. For the cuts which run along the pipe you will need to drill a hole and open this with a file to a slot which will admit the saw blade.

Remember that the saw does not point towards the centre of the pipe when you are cutting – the sides of the apertures must be parallel to fit the baffle boards.

The next stage after cleaning the edges of the square apertures is to glue in place the baffle boards which are detailed in Fig. 2. These should be left about 2 mm proud of the circumference of the pipe. At this stage, the baffle boards are only glued at the side.

Use sufficient Araldite to ensure all joins are completely airtight.

When the Araldite is thoroughly dry, the protruding edges are taken off to the circumference of the pipe with a file or Surform. Small fillets of wood are shaped to fit the inside surface of the pipe and are glued at the top and bottom of each baffle board to seal the gaps. I repeat, it is important to use sufficient Araldite to ensure an airtight joint.

It is a good idea to give the plinth (that's the 3.5 cm piece of pipe) and the main pipe a coat of matt black paint. This seals the surface and makes the pipe less grubby to handle.

Do not, however, paint the surfaces where the cabinet top and base are to be glued later with Araldite.

The next stage is to fit the cabinet base. This is a 24 cm diameter disc of 18 cm plywood. The pipe is glued with Araldite centrally on the base and the plinth glued centrally under the base.

After the glue has dried, two holes are drilled in the plinth, one to admit the speaker cable and the other to provide screwdriver access to the tweeter level control.

The cable is normally brought in at the back of the speaker cabinet. It might be convenient to position the tweeter control so that this can be adjusted without moving the speaker.

Fitting the drive units

Next a 20 cm diameter piece of Bostik self-adhesive sound deadening pad is cut and fitted to the upper surface of the cabinet base. A hole is drilled through the base and Bostik pad to provide access for the wires from the crossover to the drive units (Fig. 3). Inside surface of the pipe is now covered with a layer of Bostik self-adhesive pad ($1\frac{1}{2}$ pads per enclosure) up to the edge of the baffle boards and the speaker drive units are fitted and wired.

A gasket is provided for the Dalesford unit but it is necessary to cut out a thick paper gasket for the tweeter. The bass unit is fitted with 2BA 'T' nuts and bolts, the tweeter being fitted with woodscrews.

The wires are passed through the hole in the base and the hole is then sealed with glue. The wires from the tweeter can be taped to the back of the bass unit magnet assembly.

Crossover is now fitted (Fig. 3) and wired, the tweeter level control – a 10 ohm 3 watt wirewound preset variable resistor – is wired in series with the tweeter and glued in place, taking care not to get glue in the moving parts of the preset control.

Acoustic absorbent material in this design consists of discs of 2" BAF wadding at the top and bottom of the cabinet and a filling of long fibre wool.

Put a 20 cm disc of BAF wadding in the bottom of the cabinet and fill the cabinet evenly with 50 gm long fibre wool.

A 20 cm diameter piece of Bostik sound-deadening pad is now fixed centrally under the cabinet top and to this is glued a 20 cm disc of BAF wadding (see Fig. 5).

Before fitting the cabinet top, check that all glued joints appear airtight and apply more glue to seal if necessary. The cabinet top is then bonded in place, once again with sufficient glue to ensure an airtight joint.

When the Araldite is dry, we have a working loudspeaker which only needs its final cosmetic treatment.

Finish

The cabinet and base can be stained and finished with polyurethane varnish after covering the edge of the plywood with Conti-strip self-adhesive veneer edging strip, or alternatively the top and base can be painted.

Speaker grille fabric is trimmed to an exact fit between the cabinet top and base and is held in place with two vertical strips of Velcro glued at the rear of the speaker as shown in Fig. 4.

In the opinion of the long-suffering members of my tame listening panel (who profess to have a dozen or so educated ears between them) the Round-Sound speakers compared very favourably with several well known mini-monitor designs costing over twice as much. Extended listening tests since have not changed that opinion.

Some constructors may prefer to use a soft dome type of tweeter. The Audax HD12.9 D25 has a similar sensitivity to the Isophon KK10/8 and will be set for 0dB with the preset control in the fully "shorted-out" position. The Peerless KO10DT will require the control in the half-way position. The Peerless DT10HFC is a very pleasant sounding tweeter but I suspect that it will not be too happy at being asked to work with a 12dB/octave crossover if the system is operated at high power.

SYSTEM 8

Components list

What you need

2 Dalesford D30/110 bass units
2 Isophon KK10/8 tweeters
Crossover networks (see diagram)
2 10 ohm 3 watt wirewound preset controls
2 30 cm lengths heavyweight 20 cm I.D. flue pipe
2 3.5 cm lengths heavyweight 20 cm I.D. flue pipe
4 24 cm discs 18 mm plywood
2 pieces 12 mm ply 10 cm × 14 cm
2 pieces 18 mm ply 14 cm × 14 cm
1 pack Bostik sound deadening panels
36″ × 8″ of 2″ BAF wadding
100 grams long fibre wool
2 speaker plugs and leads
4 feet Velcro
2 pieces grille fabric 30 cm × 72 cm
4 packs Araldite
8 2BA T nuts and bolts
8 No.6 × $\frac{3}{4}$″ woodscrews
6 No.6 × $\frac{1}{2}$″ woodscrews
8 wood fillets 2 cm wide × 10 cm radius

SYSTEM 8
THE CROSSOVER NETWORK

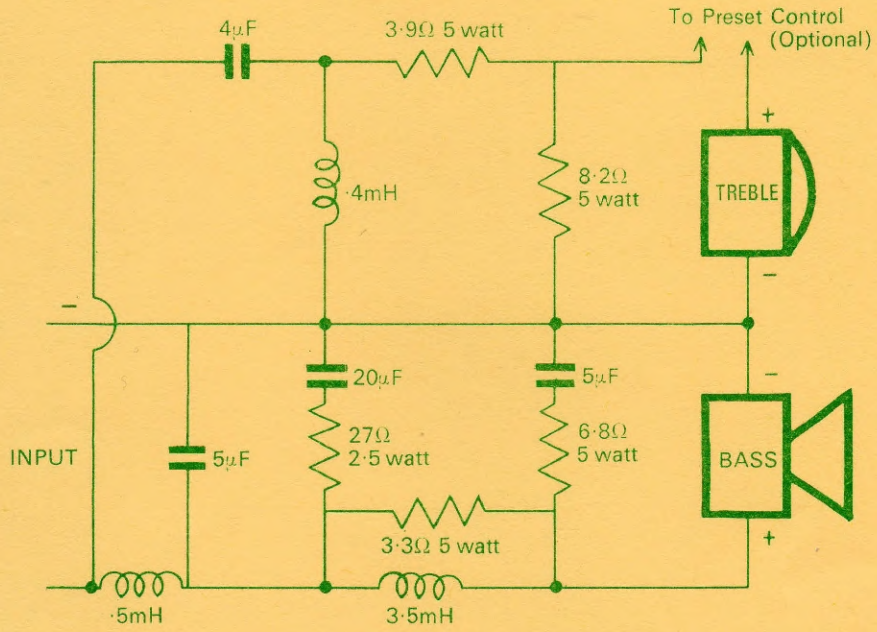

COMPONENTS LIST
(For single crossover)

Inductors	Capacitors ("Elcap" Type)	Resistors
1 3.5 mH	1 4 mfd	1 3.9 ohm 5 watt
1 .5 mH	1 20 mfd	1 8.2 ohm 5 watt
1 .4 mH	2 5 mfd	1 6.8 ohm 5 watt
		1 27 ohm 2.5/5 watt
		1 3.3 ohm 5 watt

Underside of speaker, showing crossover network Fig. 3

Cabinet ready for long fibre wool. Pipe is lined with Bostik sound deadening pad Fig. 5

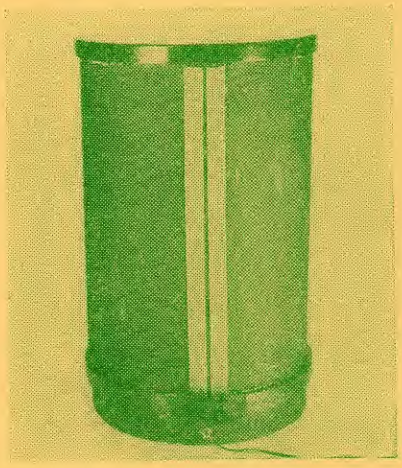

Back of speaker with Velcro strips in place which hold grille cloth in position Fig. 4

Completed cabinet showing drive units

Fig. 6

SYSTEM 8
THE BAFFLE BOARDS

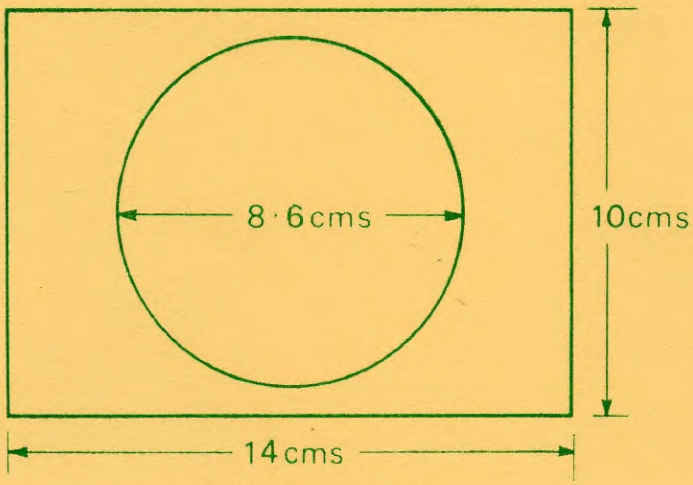

Treble baffle board
Fig. 2A

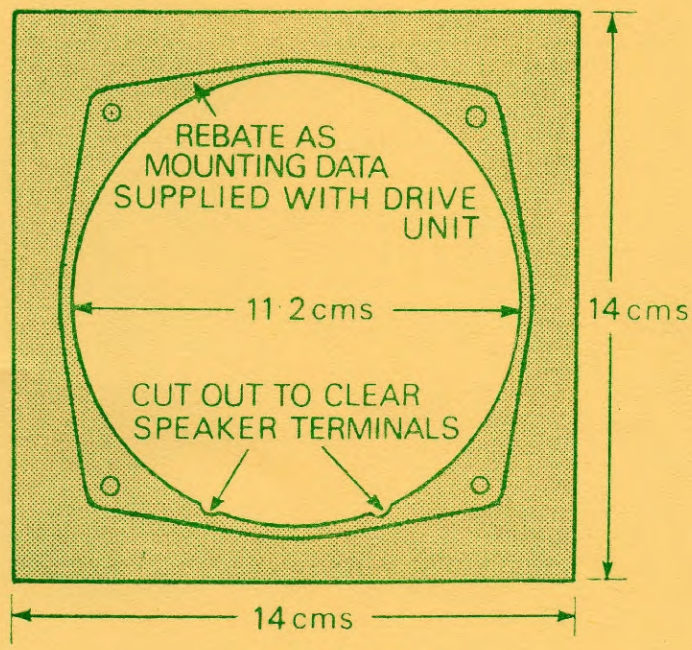

Bass baffle board
Fig. 2B

SYSTEM 8

The Round Sound by R. F. C. Stephens

(Reprinted from Popular Hi-Fi, March 1978*)*

(see following pages for text of article)

GENERAL CONSTRUCTION

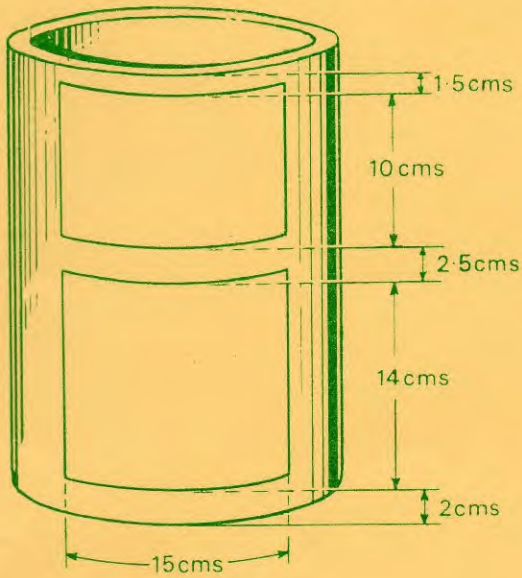

Fig. 1

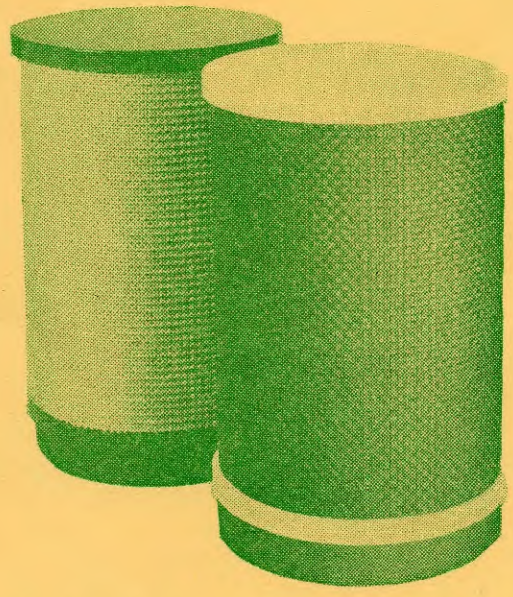

THE ROUND SOUND IN DIFFERENT DISGUISES!

On the left with stained and polished top and coarse textured beige fabric (SW12 from Wilmslow Audio) – on the right, painted white and fitted with the black Vynair cloth