SYSTEM 7
THE CROSSOVER NETWORK

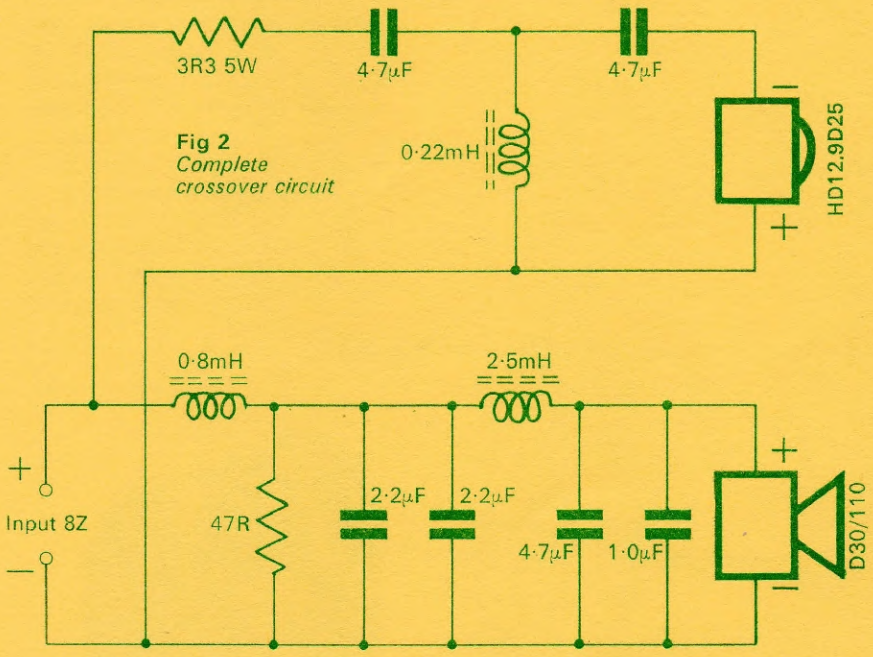

Fig 2
Complete crossover circuit

Fig. 2

COMPONENTS LIST
(For single crossover)

Inductors	Capacitors (Polyester Type)	Resistors
1 2.5 mH	3 4.7 mfd	1 3.3 ohm 5 watt
1 .8 mH	2 2.2 mfd	1 47 ohm 5 watt
1 .22 mH	1 1 mfd	

SYSTEM 7

COMPONENTS LIST

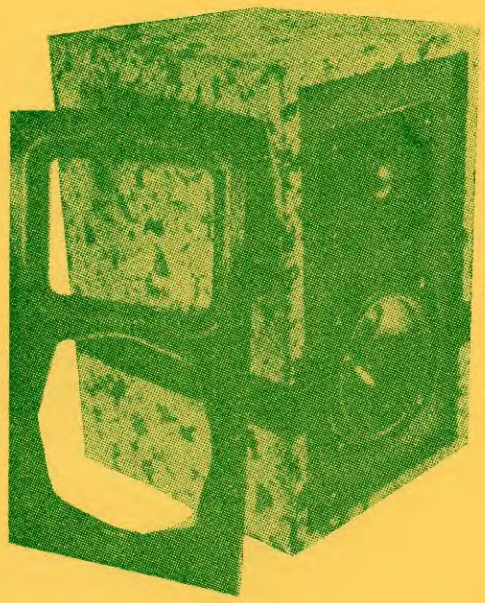

components list

2 D30/110 bass units
2 Audax HD12.9D25
2 BSC3 crossover networks complete
2 pieces BAF 90 cm × 18 cm
2 pieces BAF 28 cm × 15 cm
10 bitumenous felt pads
3 metres 6 amp cable
16 2BA 'T' nuts
16 2BA × 20 mm screws
2 4 mm red terminals
2 4 mm black terminals

material list

914 mm square × 12 mm chipboard
2 pieces 10 mm plywood 304 mm × 176 mm
5 metres 12 mm square ramin
112 No.6 × 25 mm countersunk screws
Evo-Stik resin W glue
Contact adhesive
Aquaseal No.5
20 mm panel pins
Hermetite instant gasket
Black or dark brown stain

LOUDSPEAKERS CUTTING PLAN

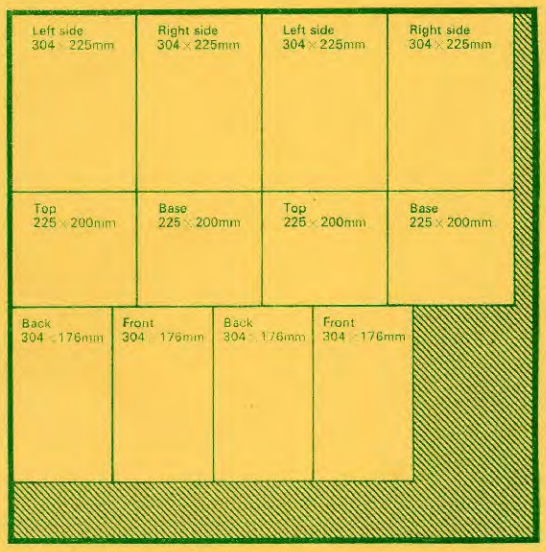

Fig. 5

SYSTEM 7

SPECIFICATION

TABLE 1

Frequency response: 50Hz–20kHz±3db (see curve)
Impedance: 8ohms nominal
Power handling: 50W programme
Amplifier power: 20W—50W
Drive Units:
  11cm bextrene cone bass
  2.5cm soft dome treble
Crossover point 3.2kHz
Dimensions: 328mm high x 200mm wide x 225mm deep
Weight: 7.2kg

THE DRIVE UNITS

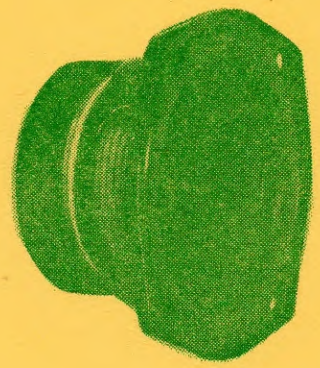

Dalesford D30/110
Flux density: 11000 gauss
Weight: 1.2 kgs.
Voice coil diameter: 25 mm
Nominal frequency response: 50 – 7 kHz

Audax HD12.9 D25
Flux density: 15000 gauss
1″ Soft dome
Frequency response: 2kHz – 20kHz

SYSTEM 7
RESPONSE CURVES

Fig 3 *Bass unit only - frequency response*

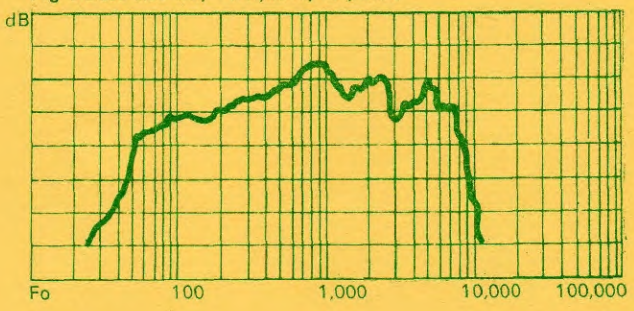

Fig 4 *Crossover electrical response*

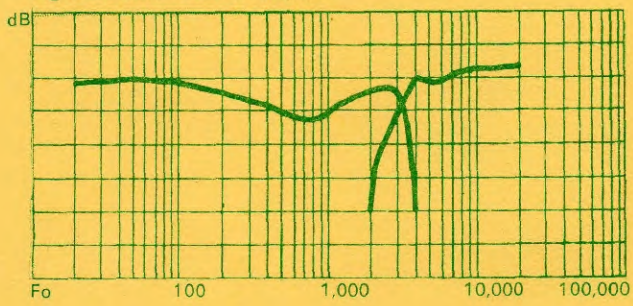

Fig 10 *Frequency response*

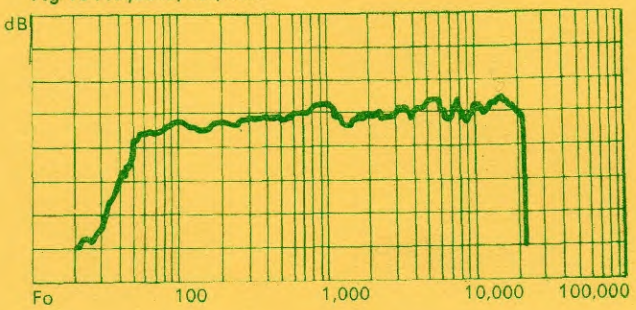

Fig 11 *Impedance curve*

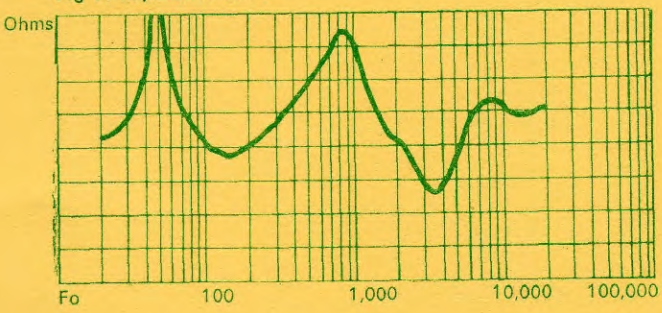

SYSTEM 7

The BSC3 design by C. Rogers, *(Reprinted from Practical HiFi and Audio,* December 1977*)*

(see following pages for text of article)

GENERAL CONSTRUCTION

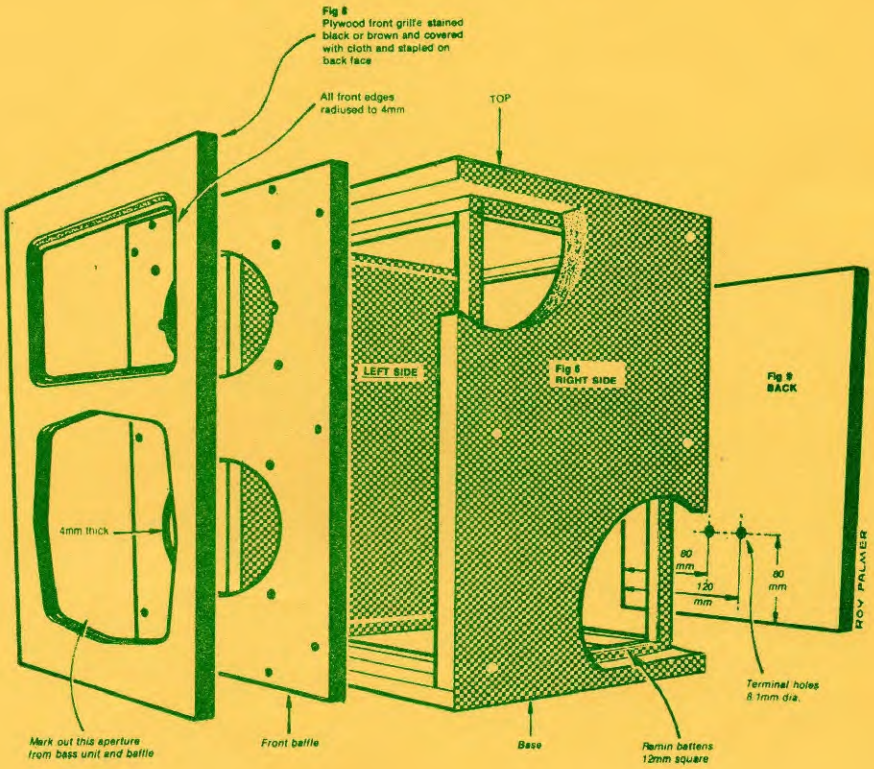

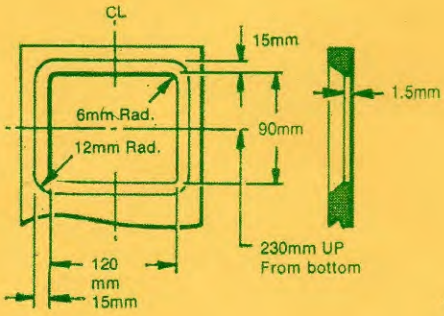

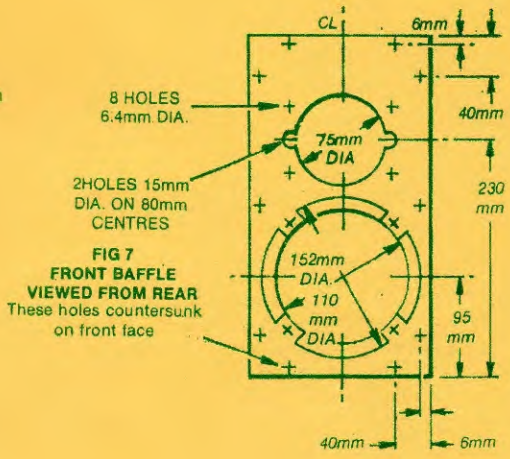

FIG 7
FRONT BAFFLE
VIEWED FROM REAR
These holes countersunk on front face