SYSTEM 1

Volume: 15 litres

Type: Acoustic suspension.

Response: 60 – 20 KHZ

Bass unit: Dalesford D45/153 ($6\frac{1}{2}$")

Treble unit: Isophon KK10/8

Crossover network: Dalesford DX1/2

Suitable for amplifiers of 10 – 40 watts per channel

Impedance: 8 ohms.

Acoustic absorbent: Long fibre wool

Cabinet material: 18 mm chipboard

Grille frame material: 12 mm plywood

Components list
(for pair of cabinets)

4 25 × 30 cms 18 mm chipboard

4 25.5 × 30 cms 18 mm chipboard

4 25.5 × 28.6 cms 18 mm chipboard

2 24.8 × 29.8 cms approx. 12 mm plywood (Exact size dependent on thickness of speaker fret)

5.5 metres 2 × 2 cms wood for battens

2 Dalesford D45/153 bass units

2 Isophon KK10/8 treble units

1 Dalesford crossover pack DX1/2

226 grams (8 ozs.) longfibre wool

2 pieces fret cloth 40 cms × 33 cms.

2 loudspeaker connection panels, DIN 2 pin speaker sockets or similar 30 cms Velcro.

T nuts, screws, wood glue, etc.

SYSTEM 1
THE CROSSOVER NETWORK

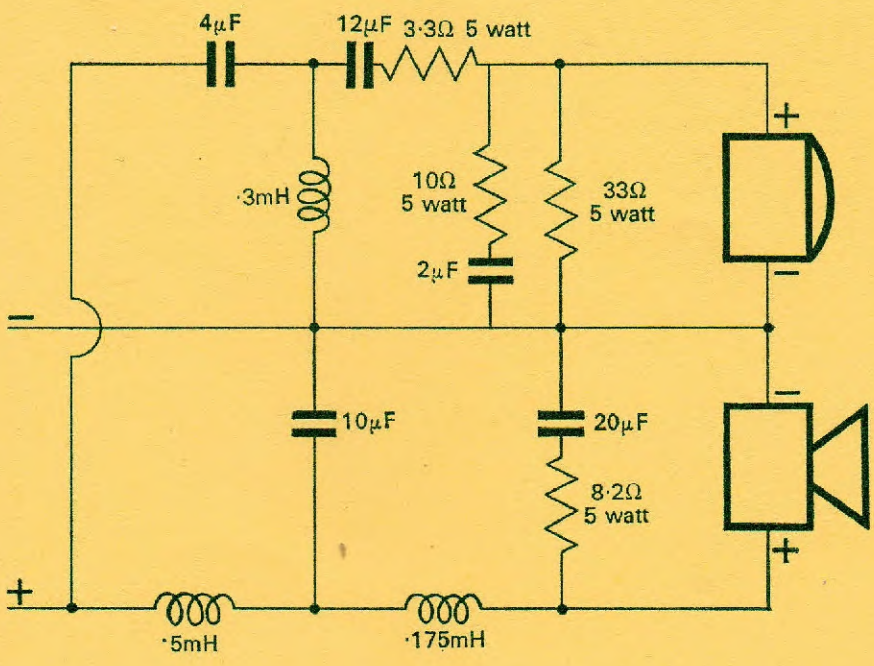

Components list (for single crossover)

Inductors	Capacitors ("Elcap" type)	Resistors
1 .5 mH	1 10 mfd	1 8.2 ohm 5 watt
1 .175 mH	1 20 mfd	1 10 ohm 5 watt
1 .3 mH	1 4 mfd	1 33 ohm 5 watt
	1 12 mfd	1 3.3 ohm 5 watt
	1 2 mfd	

This crossover is available in assembled form as Dalesford Crossover Pack DX1/2 (Pack contains pair)

SYSTEM 1
GENERAL CONSTRUCTION

All dimensions in cms.

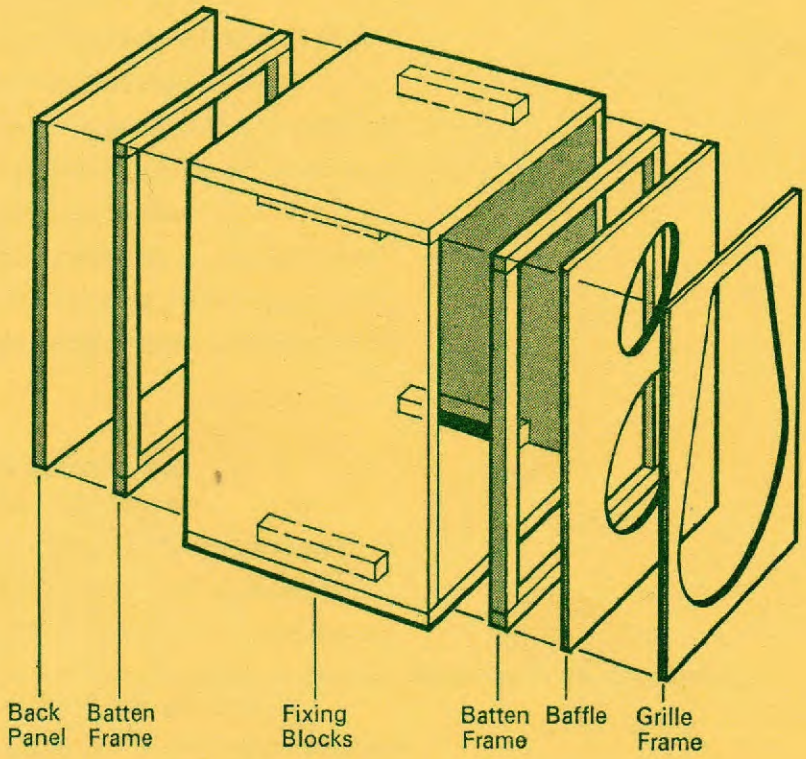

Internal dimensions:	Height: 30 cms Width: 25 cms Depth: 20 cms (between front surface of back panel and back of baffle)
External dimensions: (using 18 mm chipboard)	Height: 33.6 cms Width: 28.6 cms Depth: 25.5 cms

The drive units are fitted from the front of the cabinet and therefore the back panel and baffle may be permanently glued and screwed in place. The crossover network should be fixed in the bottom of the cabinet, preferably on to a piece of rubber or felt to prevent possible rattles.

SYSTEM 1

THE BAFFLE AND GRILLE FRAME

All dimensions in cms.

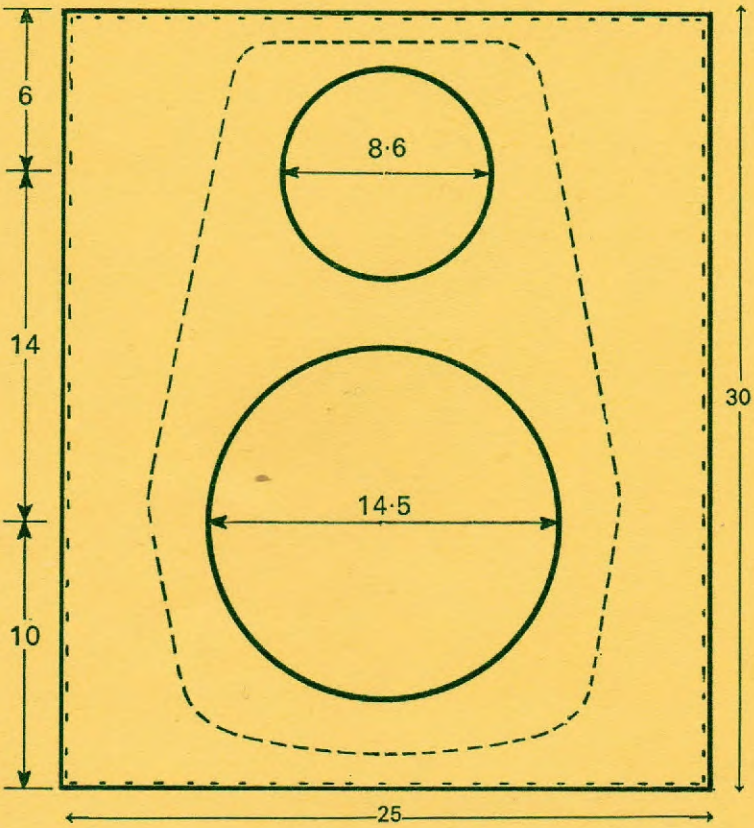

Grille frame as dotted line.

Outside dimension of the grille frame is smaller than the baffle to allow for the thickness of the speaker fret cloth.

Material for baffle: 18 mm chipboard

Material for grille frame: 12 mm plyboard

ACOUSTIC ABSORBENT

The cabinet should be evenly filled with 113 grams (4 ozs.) of Long Fibre Wool (226 grams per pair). Only wool prepared to Dr. A. Bailey's specification should be used.

SYSTEM 1
FITTING THE FRET CLOTH

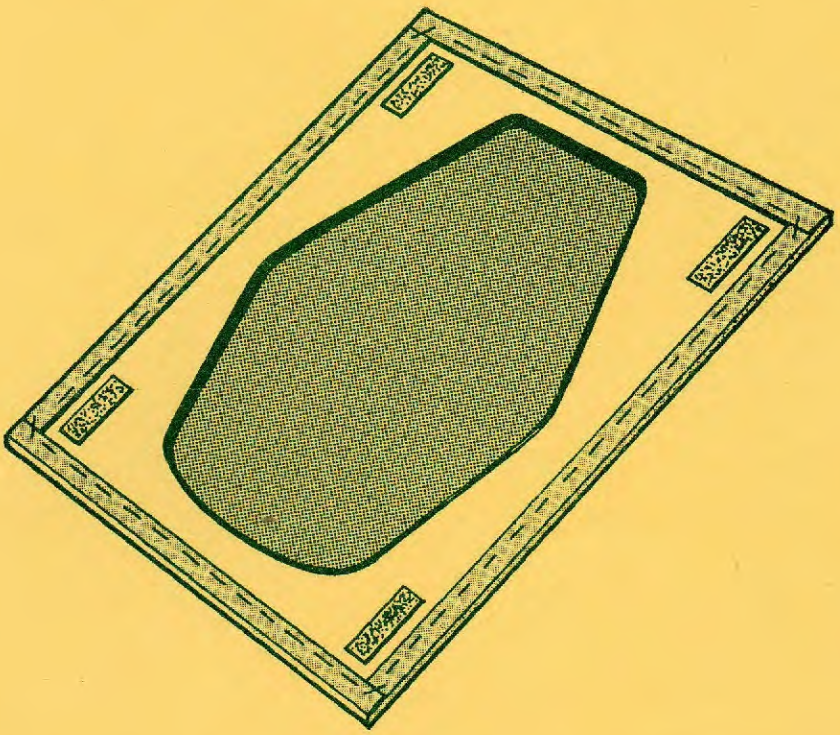

The baffle and grille frame front surfaces should be painted matt black. When the grille frame is dry, the fret cloth should be stretched taut over the frame and glued or stapled to the rear of the frame as illustrated. Velcro "hook and loop" tape is a convenient method of holding the grille frame in the cabinet.

FITTING THE DRIVE UNITS

The drive units are fitted from the front of the baffle, making sure that a good seal is made with the drive unit gaskets. Woodscrews may be used for the treble unit; for the bass unit 2 B.A. (or 5 mm) "T" nuts and bolts are best.