TYMPHANY

Transducer Specification Sheet

Model Number: NE265W-04
Product Line: Peerless Platinum

Revision: Rev 3_0
Date: 1-Sep-09

Peerless

Product Description:

This 10 inch 4 ohm member of the NE family has leading-edge transducer technology packaged in a cutting edge, stylistic design. The subwoofers in this family feature an innovative cast aluminium basket design which minimizes acoustic reflections inside the driver, through large basket windows and sculpted basket spokes. The basket also is designed to act as a highly coupled heat sink to the Neodymium-Iron-Boron magnet (NdFeB) motor, so as to improve power handling capacity. An additional heat sink is available to provide extra thermal protection if needed. The cone and dust cap are constructed of natural wood fiber material with proprietary coating formulas & processes, so as to yield high clarity products. The cone designs also utilize pentacone technology for improved frequency response. The voice coil bobbin is titanium, for improved performance. The FEA-designed motor features copper caps to minimize inductance and extend performance to high frequencies. Rounding out the design is a 4-way terminal block connector, for ease of electrical connection.

Mechanical 2D Drawing:

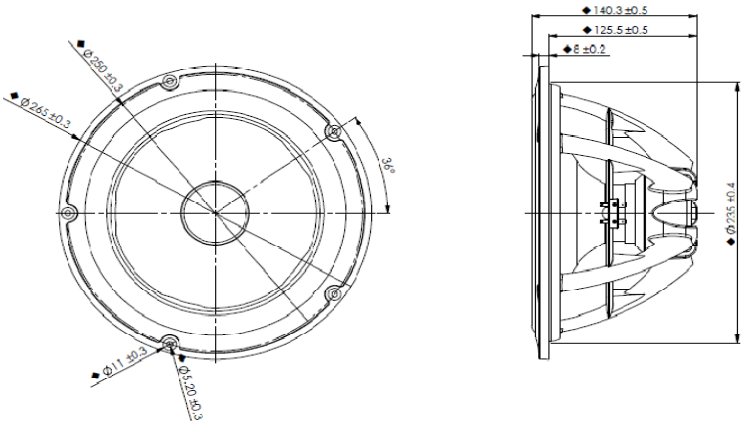

Specifications:

DC Resistance	R_{evc}	Ω	2.9	5.0%	Energy Bandwidth Product	EBP	$(1/Q_{es})\cdot f_s$	77
Minimum Impedance	Z_{min}	Ω	3.7	7.5%	Moving Mass	M_{ms}	g	98.21
Voice Coil Inductance	L_e	mH	0.40		Suspension Compliance	C_{ms}	um/N	476.0
Resonant Frequency	f_s	Hz	23	15.0%	Effective Cone Diameter	D	cm	20.5
Mechanical Q Factor	Q_{ms}	-	13.8		Effective Piston Area	S_D	cm^2	330.1
Electrical Q Factor	Q_{es}	-	0.30		Equivalent Volume	V_{as}	L	72.83
Total Q Factor	Q_{ts}	-	0.29		Motor Force Factor	BL	T·m	11.74
Ratio f_s / Q_{ts}	F	f_s / Q_{ts}	79		Motor Efficiency Factor	β	$(T\cdot m^2)/\Omega$	48.18
Half Space Sensitivity @ 2.83V	dB@2.83V/1m	dB	88.0	+/-1.0 [1]	Voice Coil Former Material	VC_{fm}	-	TiSV
Sensitivity @ 1W/1m	1W/1m	dB	86.7	+/-1.0 [1]	Voice Coil Inner Diameter	VC_d	mm	51.3
					Gap Height	Gh	mm	8.0
Rated Noise Power (IEC 2685 18.1)	P	W	150		Maximum Linear Excursion	X_{max}	mm	9.05
Test Spectrum Bandwidth	20Hz - 2kHz		12 dB/Oct		Ferrofluid Type	FF		N/A
					Transducer Size	-	inch	10
					Transducer Mass	-	kg	2.24

1 - Piston Band Sensitivity Tolerance

Frequency and Impedance Response:

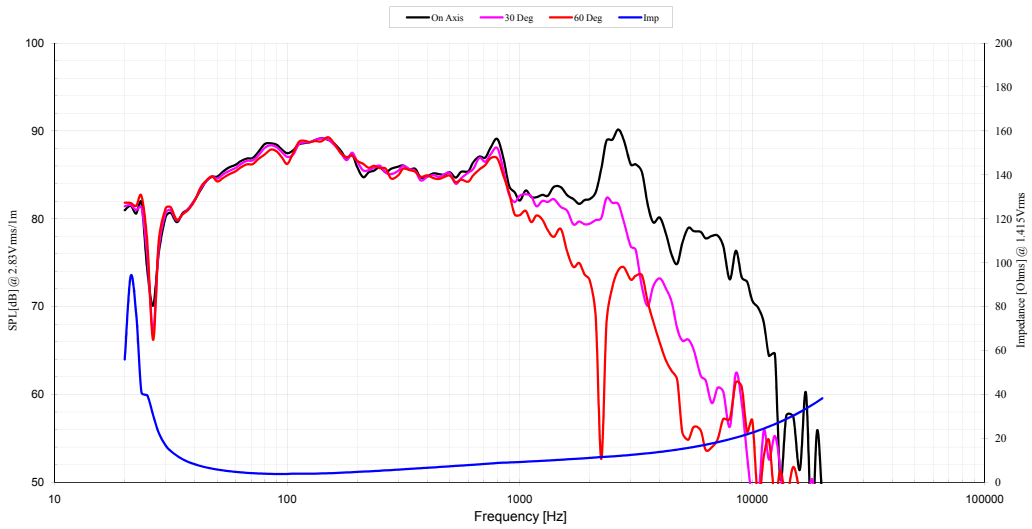

F088-0713A

Tymphany HK Ltd
Address : Room 1307-8 Dominion Centre, 43-59 Queen's Rd East, Wanchai, Hong Kong
E-mail: sales@tymphany.com